Propane Burnishers 27"

Parts Schematic

PB27 ***Item #87052***
PB27C ***Item #87054***

Better Resources. Better Results.

BETCO®

©Betco Corporation. All Rights Reserved • 1001 Brown Avenue • P.O. Box 3127 • Toledo, Ohio 43607-0127 • 800-777-9343 • www.betco.com

item	Old PBI #	Betco #	Description
1	P1050	~~E012284~~	Housing complete / Old style PE50051
2	P1136	E011290	7 mm x 8 mm Key
3	P1022	E010428	10.0 Pulley FOR 28" DECK
	P1021	E012403	8.5" Pulley FOR 24" DECK
	P1020	E012401	7.5" Pulley FOR 21" DECK
4	P1017	E012400	D25 mm Bushing
5	P1047	E010586	3/4 Shaft plate
6	P2402	E010252	27" Flex Lok assembly
	P2401	E010251	24" Flex Lok assembly
	XT2400	E010250	21" Flex Lok assembly
7	see catalogue		28" Pad

item	Old PBI #	Betco #	Description
	see catalogue		24" Pad
	see catalogue		21" Pad
8	~~P1066-1~~	~~E011229~~	~~Center Lock 3 spring type~~
	XT1066-2	E012517	Center Lok II screw type
9	P1115-BX	E012446	BX50 Belt FOR 28-17 Kaw. MACH.
	P1116-BX	E010472	BX51 Belt for machines sn11860 & up
	P1112-BX	E010302	BX47 Belt FOR 24-17 MACH.
	P1118-BX	E010475	BX53 Belt FOR 24-13 MACH.
	P1105-BX	E010107	BX40 Belt FOR 21-11/13 Honda
	P1106-BX	E010294	BX41 Belt FOR 21-17 Kaw 11879 & up
10	P2402-27	PE50039	28" Flex Lok complete w/o pad
	P2401-24	PE50027	24" Flex Lok complete w/o pad
	P2400-21	PE50028	21" Flex Lok complete w/o pad

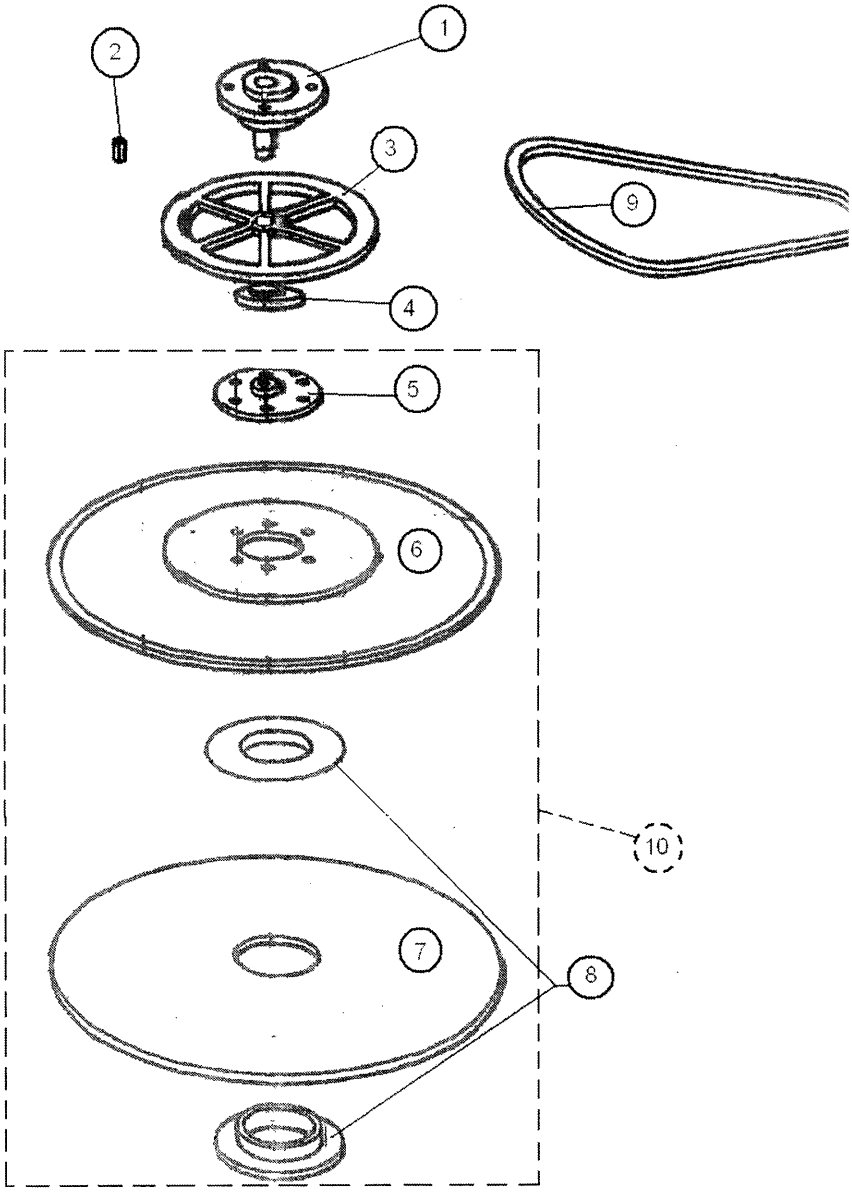

Plastic Pad Driver

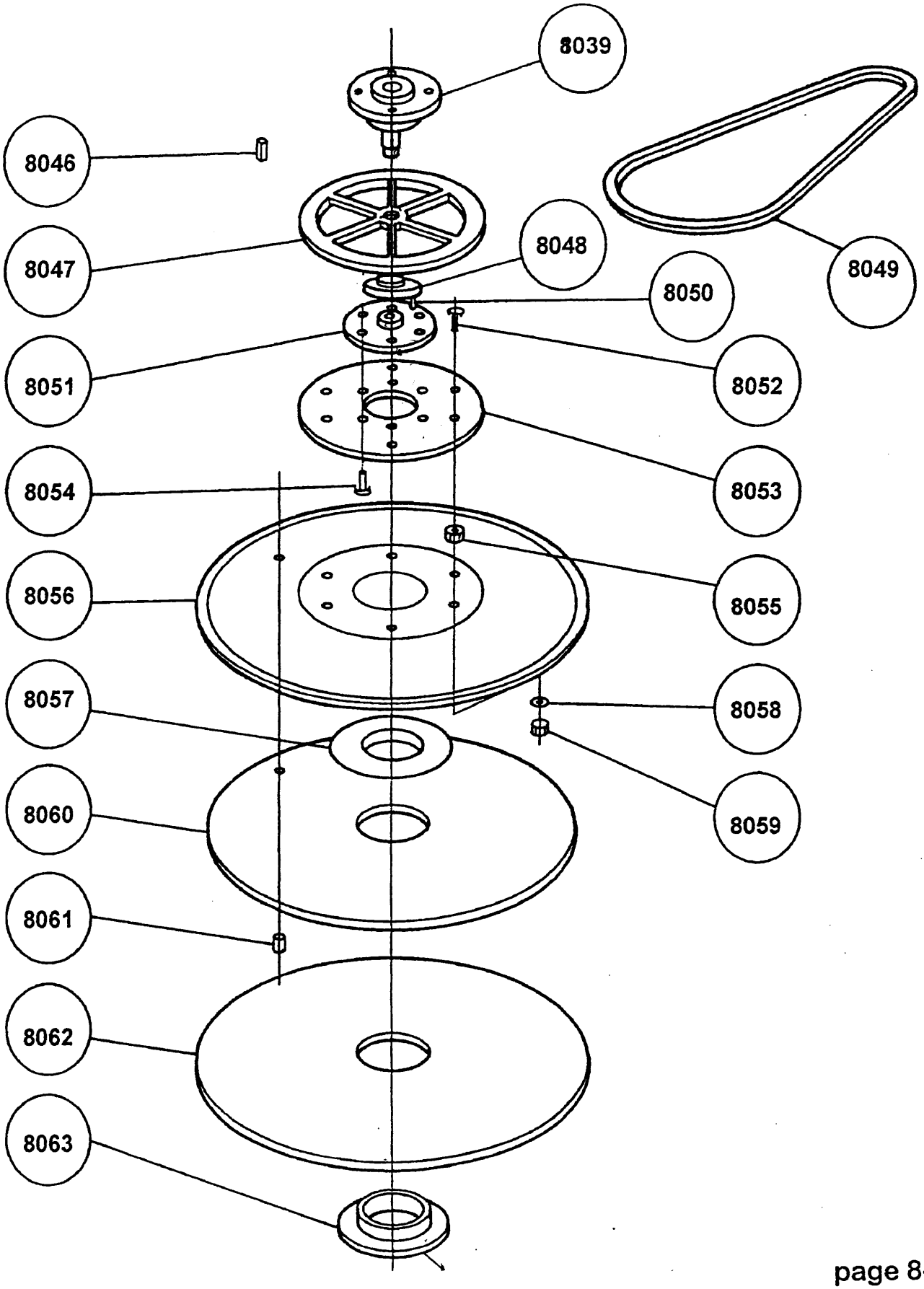
8039
8046
8047
8048
8049
8050
8051
8052
8053
8054
8055
8056
8057
8058
8059
8060
8061
8062
8063

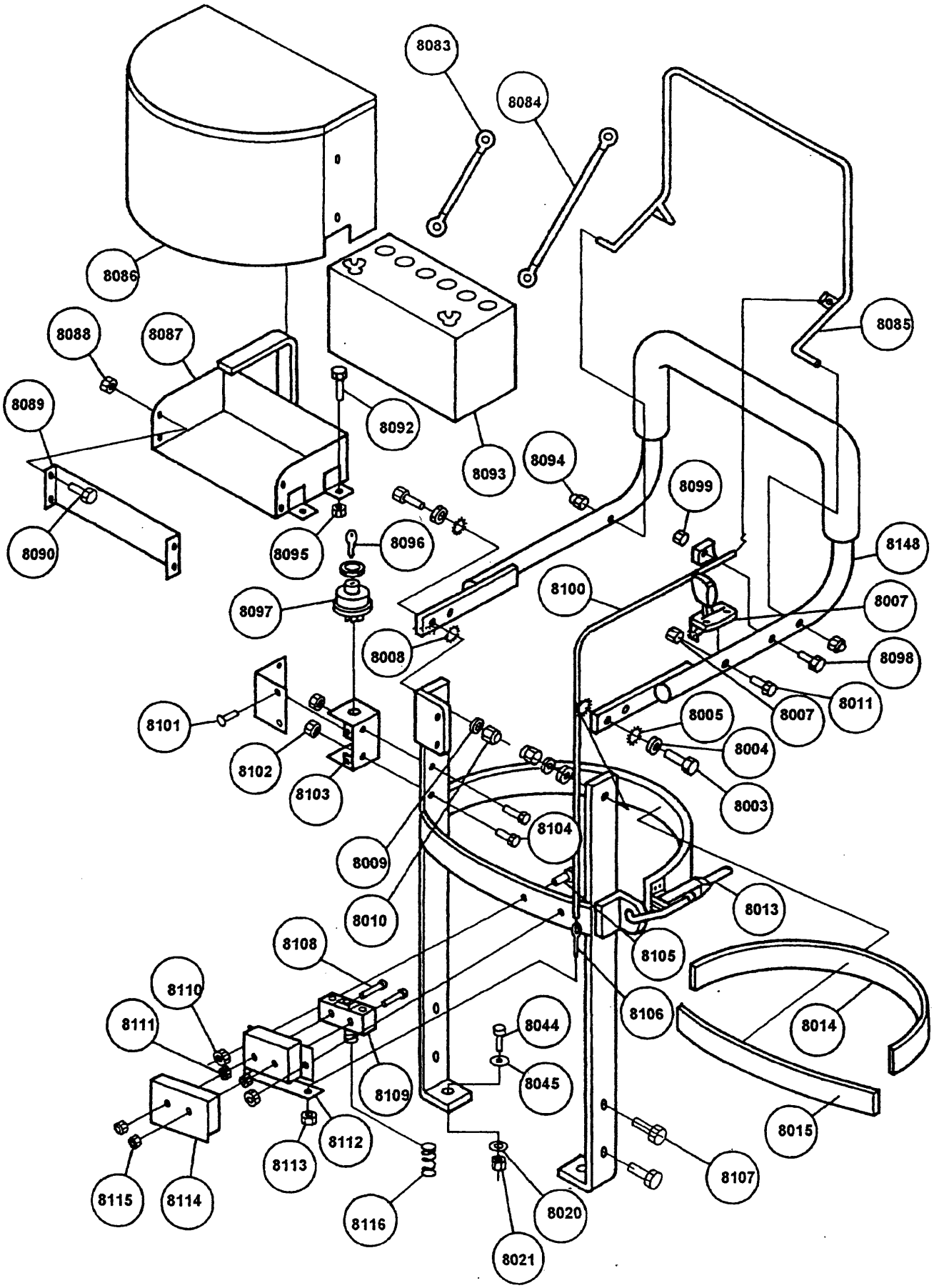
8083
8084
8086
8088
8087
8085
8089
8092
8093
8094
8099
8090
8095
8096
8148
8097
8100
8007
8008
8098
8011
8101
8005
8007
8004
8102
8103
8003
8104
8009
8013
8010
8108
8105
8110
8106
8111
8044
8014
8109
8045
8015
8112
8113
8107
8115
8114
8116
8020
8021

87052 & 87054 (w/clutch) 27" Propane Burnisher Parts Schematic

REF #	Description	PBI #
8042	6" WHEEL	P1073
8043	WHEEL SPACER (2)	P2033
8044	BOLT	P2026
8045	FLAT WASHER	P2025
8046	KEY STOCK	P1036
8047	PULLEY	P1021
8048	BUSHING	P1017
8049	BELT	P1111
8050	BOLT	P2034
8051	PLATE	P1047
8052	BOLT (6)	P2027
8053	FLEX COUPLER	P1061
8054	BOLT (6)	P2027
8055	FLEX SPACER (6)	P1062
8056	PAD DRIVER	P1058
8057	CENTER DEVICE (MALE)	P1066-M
8058	WASHER	P2035
8059	NUT	P2019
8060	GRIPPER RING	P1065-27
8061	RIVET (6)	P2036
8062	FLOOR PAD	PAD28
8063	CENTER DEVICE (FEMALE)	P1066-F
8064		
8065		
8066	HOSE	P1006
8067	FITTING	P1013
8068	FUEL SHUTOFF	P1082-2
8069	FITTING	P1008
8070	HOSE	P1006
8071	VACUUM HOSE	P2013
8072	FITTING	P1011
8073	FUEL REGULATO	148-0992
8074	FUEL HOSE	P2014
8075	FITTING	P1010
8076	VACUUM TEE	P2037
8077	VACUUM HOSE	P2015
8078	FITTING	P1012/P1(
8079	BOLT	P2021
8080	LOCK WASHER	P2022
8081	BOLT	P2021
8082	LOCK WASHER	P2022
8083	BATTERY CABLE	P1133-9
8084	BATTERY CABLE	P1133-20
8085	CLUTCH ARM	P1064-4
8086	BATTERY COVER	P1053

87052 & 87054 (w/clutch) 27" Propane Burnisher Parts Schematic

REF #	Description	PBI #
8087	BATTERY TRAY	P1054
8088	NUT	P2038
8089	BATTERY BRACKET	P1054
8090	BOLT	P2039
8091	VACUUM HOSE	P1087
8092	BOLT	P2040
8093	BATTERY	P1133
8094	NUT	P2041
8095	NUT	P2006
8096	KEY	48-340-01
8097	KEY SWITCH	308-0385
8098	BOLT	P2042
8099	NUT	P2006
8100	CABLE	P1132
8101	RIVET	P2043
8102	NUT	P2044
8103	KEY SWITCH BOX	P1055
8104	BOLT	P2040
8105	BOLT	P2045
8106	" I" BOLT	P2017
8107	SCREW	P2046
8108	SCREW	P2047
8109	SWITCH	P1064-2
8110	NUT	P2038
8111	NUT	P2048
8112	CLUTCH SWITCH BOX	P1064-2
8113	NUT	P2049
8114	SWITCH BOX COVER	P1064-3
8115	NUT	P2048

REF #	Description	
8000	28" SCHEMATIC	P2002
8001	HAND GRIP	P1077
8002	UPPE HANDLE (STD)	P1063
8003	BOLT	P2003
8004	LOCK WASHER	P2004
8005	FLAT WASHER	P2005
8006	THROTTLE CABLE	P1068-44
8007	NUT	P2006
8008	LOCK WASHER	P2007
8009	LOCK WASHER	P2008
8010	NUT	P2009
8011	BOLT	P2010
8012	LOWER HANDLE (STD)	P1063-L
8013	LATCH SCREW	P1130
8014	FELT	P2011
8015	FELT	P2012
8016	NUT	P2020
8017	FLAT WASHER	P2023
8018	MAINTENANCE METER	P1076-1
8019	RIVET (3)	P2024
8020	LOCK WASHER	P2025
8021	NUT	P2019
8022	BOLT	P2026
8023	FLAT WASHER	P2025
8024	SWIVEL CASTER	P1074-1
8025	BOLT	P2028
8026	LOCK WASHER	P2029
8027	FLAT WASHER	P2030
8028	BOLT	P2031
8029	LOCK WASHER	P2032
8030	FLAT WASHER	P2033
8031	DECK	P1004
8032	BUMPER GUARD 76"	P1143
8033		
8034	WHEEL AXLE	P2034
8035	WHEEL BRACKET	P1051
8036	COTTER PIN	P2035
8037	FLAT WASHER	P2025
8038	NUT	P2019
8039	FRONT END	P1050
8040	IDLER PULLEY	P1025
8041	BELT TENSIONER	P1071

Please specify model and if equipped with a clutch

REF #	Description	PBI #
8087	BATTERY TRAY	P1054
8088	NUT	P2038
8089	BATTERY BRACKET	P1054
8090	BOLT	P2039
8091	VACUUM HOSE	P1087
8092	BOLT	P2040
8093	BATTERY	P1133
8094	NUT	P2041
8095	NUT	P2006
8096	KEY	48-340-01
8097	KEY SWITCH	308-0385
8098	BOLT	P2042
8099	NUT	P2006
8100	CABLE	P1132
8101	RIVET	P2043
8102	NUT	P2044
8103	KEY SWITCH BOX	P1055
8104	BOLT	P2040
8105	BOLT	P2045
8106	" I" BOLT	P2017
8107	SCREW	P2046
8108	SCREW	P2047
8109	SWITCH	P1064-2
8110	NUT	P2038
8111	NUT	P2048
8112	CLUTCH SWITCH BOX	P1064-2
8113	NUT	P2049
8114	SWITCH BOX COVER	P1064-3
8115	NUT	P2048

Please specify model and if equipped with a clutch